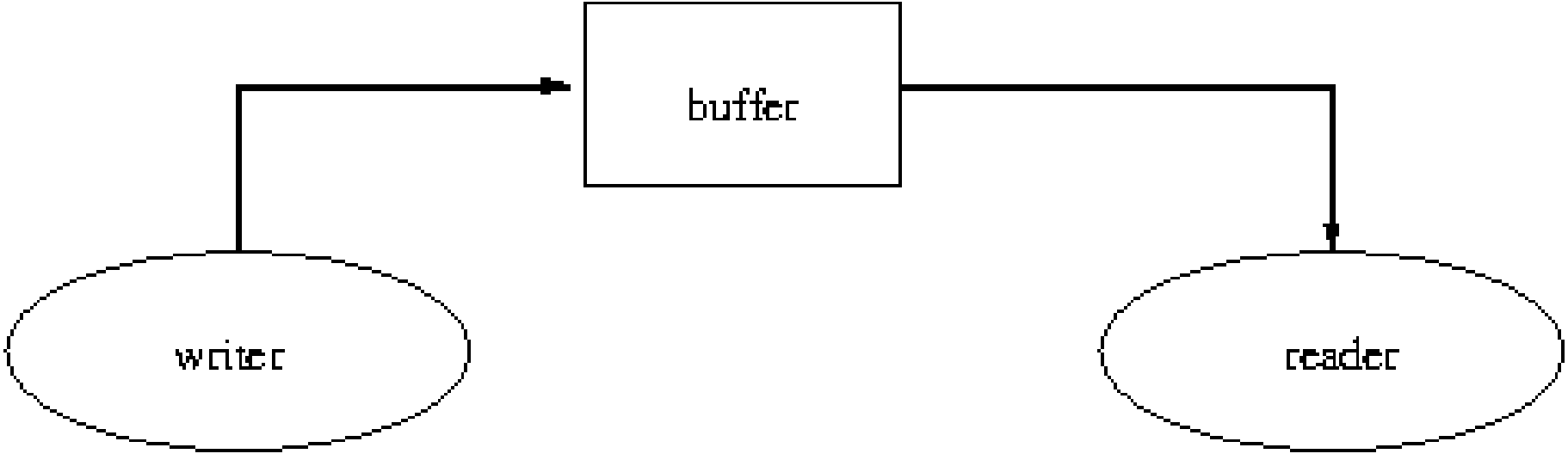
buffer
writer
reader